KUS400 series analogue output ultrasonic sensor

Dimensions

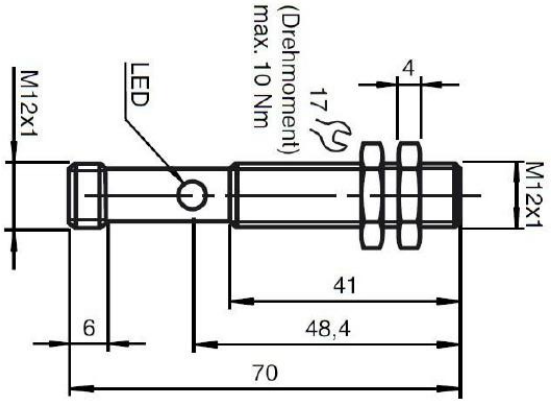

Electronic interface and signals definition

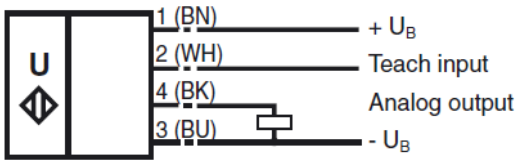

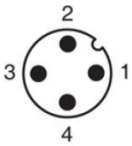

Core colors in accordance with EN 60947-5-2.

Parameter

General specifications

Sensing range	35... 400 mm
Adjustment range	50 ... 400 mm
Unusable area	0 ... 35 mm
Standard target plate	100 mm x 100 mm
Transducer frequency	approx.310 kHz
Response delay	approx. 50 ms

Indicators/operating means

LED blue	power-on
LED yellow	indication of the switching state flashing: program function object detected
LED red	permanently red: Error Red, flashing: program function, object not detected

Electrical specifications

Operating voltage U_B	10 ... 30 V DC , ripple 10 %SS
No-load supply current I_0	⩽ 20 mA

Input

Input type	1 TEACH-IN input
	operating range A1: $-U_B$ ... +1 V, operating range A2: +6V ...$+U_B$

	input impedance: > 4.7 kΩ; TEACH-IN program pulse: ≥ 1 s

Output

Output type	1 analogue output 4-20mA
Rated operating current I_e	200 mA, short-circuit/overload protected
Resolution	0.17mm
Repeat accuracy	≤1 %
Switching frequency	≤ 4 Hz
Temperature influence	± 1.5% of full-scale value

Ambient conditions

Ambient temperature	-25…70℃(248...343K)
Storage temperature	−40…85℃(233...358K)

Mechanical specifications

Connection	V1 connector(M12×1),4-pin
Protection degree	IP65
Material Housing	brass, nickel-plated
Transducer	epoxy resin/hollow glass sphere mixture; foam polyurethane, cover PBT

Description of Sensor Functions

Adjusting the evaluation limits

The ultrasonic sensor features an analogue output with two teachable evaluation limits. These are set by applying the supply voltage -U or +U to the TEACH-IN input. The supply voltage must be applied to the TEACH-IN input for at least 1 s. LEDs indicate whether the sensor has recognized the target during the TEACH-IN procedure. The lower evaluation limit A1 is taught with -U, A2 with +U.

Two different output functions can be set:

1. Analogue value increases with rising distance to object (rising ramp)
2. Analogue value falls with rising distance to object (falling ramp)

TEACH-IN rising ramp (A2 > A1)

- Position object at lower evaluation limit
- TEACH-IN lower limit A1 with - U
- Position object at upper evaluation limit
- TEACH-IN upper limit A2 with + U

TEACH-IN falling ramp (A1 > A2)

- Position object at lower evaluation limit

- TEACH-IN lower limit A2 with + U
- Position object at upper evaluation limit
- TEACH-IN upper limit A1 with – U

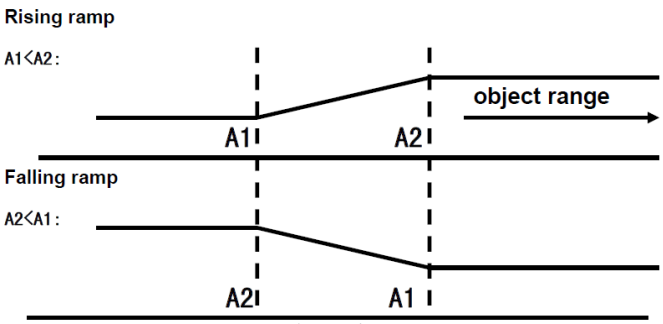

Default setting

A1: unusable area

A2: nominal sensing range

Mode of operation: rising ramp

A1->∞,A2->∞: Target presence detection

Target detected: 20mA

Target not detected: 4mA

Installation conditions

If the sensor is installed at the environment temperature fall below 0℃,It should do well on the protective measures. In case of direct mounting of the sensor in a through hole using the steel nuts, it has to be fixed at the middle of the housing thread.